User Manual

Lithium Battery Pack

Soluna EOS-5K Pack

SOLUNA (Shanghai) Co.,Ltd.

Mar.2023 | Revision A.2

About this manual

This manual describes how to install the Soluna EOS-5K Pack battery. Please read this manual carefully before you start to install the product, and follow the instructions throughout the installation process. If you are not sure about any of the requirements, recommendations, or safety procedures described in this manual, please contact Soluna immediately for advice and clarification. The information included in this manual is accurate at the time of publication. However, with regards to the product design and technical specification updates, our company reserves the right to make changes at any time without prior notice. In addition, the illustrations in this manual are meant to help explain system configuration concepts and installation instructions. The illustrated items maybe different from the actual items at the installation location.

Content

1 Safety precautions

1.1 Warning Signs

Warning signs are used to warn you about the conditions that may cause severe injury or damage to the device. They instruct you to exercise caution to prevent danger. The following table describes the warning signs used in this manual.

Sign	Description
	This battery pack contains high voltage which can cause electric shock resulting in severe injury.
	Make sure that the battery polarity is connected correctly.
	Keep the battery pack away from open flame or ignition sources
	Keep the battery pack away from children.
	Read the manual before installing and operating the battery pack.
	The battery pack is heavy enough to cause severe injury
	The battery pack may leak corrosive electrolyte.
	The battery pack may explode.
	The battery pack should not be disposed with household waste at the end of its working life.
	Physical injury or damage to the devices may occur if related requirements are not followed

1.2 Safety instructions

For safety reasons, installers are responsible for familiarizing themselves with the contents of this manual and all warnings before performing installation.

General safety precautions

⚠	Failure to observe the precautions described in this section can cause serious injury to persons or damage to property, observe the following precautions

1.2.1 Risks of explosion

- Do not subject the battery pack to strong impacts.
- Do not crush or puncture the battery pack.
- Do not dispose of the battery pack in a fire.

1.2.2 Risks of fire

- Do not expose the battery pack to temperatures in excess of 60°C.
- Do not place the battery pack near a heat source, such as a fireplace.
- Do not expose the battery pack to direct sunlight.
- Do not allow the battery connectors to touch conductive objects such as wires.

1.2.3 Risks of electric shock

- Do not disassemble the battery pack.
- Do not touch the battery pack with wet hands.
- Do not expose the battery pack to moisture or liquids.
- Keep the battery pack away from children and animals.

1.2.4 Risks of damage to the battery pack

- Do not allow the battery pack to come in contact with liquids.
- Do not subject the battery pack to high pressures.
- Do not place any objects on top of the battery pack.

1.3 Battery handling guide

- Use the battery pack only as directed.
- Do not use the battery pack if it is defective, appears cracked, broken or otherwise damaged, or fails to operate broken or otherwise damaged, or fails to operate.
- Do not attempt to open, disassemble, repair, tamper with, or modify the battery pack. The battery pack is not user serviceable.
- To protect the battery pack and its components from damage when trans- porting, handle with care.
- Do not impact, pull, drag or step on the battery pack.
- Do not subject it to any strong force.

- Do not insert foreign objects into any part of the battery pack.
- Do not use cleaning solvents to clean the battery pack.

1.4 Response to emergency situations

The Soluna EOS-5K Pack battery pack comprises multiple batteries that are designed to prevent hazards resulting from failures. However, SOLUNA cannot guarantee their absolute safety.

1.4.1 Leaking batteries

If the battery pack leaks electrolyte, avoid contact with the leaking liquid or gas. Electrolyte is corrosive and contact may cause skin irritation and chemical burns. If one is exposed to the leaked substance, do these actions:

1.4.2 Inhalation

Evacuate the contaminated area, and seek medical attention immediately.

1.4.3 Eye contact

Rinse eyes with flowing water for 15 minutes, and seek medical attention immediately.

1.4.4 Skin contact

Wash the affected area thoroughly with soap and water, and seek medical attention immediately.

1.4.5 Ingestion

Induce vomiting, and seek medical attention immediately.

1.4.6 Fire

In case there is a fire, always have an ABC or carbon dioxide extinguisher.

⚠	The battery pack may catch fire when heated above 150°C. If a fire breaks out where the battery pack is installed, do these actions:

- Extinguish the fire before the battery pack catches fire.
- If it is impossible to extinguish the fire but you have time, move the battery pack to a safe area before it catches fire.
- If the battery pack has caught fire, do not try to extinguish the fire. Evacuate people immediately.

⚠	If the battery catches fire, it will produce noxious and poisonous gases. Do not approach.

1.4.7 Wet batteries

If the battery pack is wet or submerged in water, do not try to access it. Contact SOLUNA or your distributor for technical assistance.

1.4.8 Damaged batteries

Damaged batteries are dangerous and must be handled with extreme caution. They are not fit for use and may pose a danger to people or property.

If the battery pack seems to be damaged, pack it in its original container, and then return it to SOLUNA or your distributor.

⚠	Damaged batteries may leak electrolyte or produce flammable gas. If you suspect such damage, immediately contact SOLUNA for advice and information.

1.5 Qualified installers

This manual and the tasks and procedures described herein are intended for use by skilled workers only. A skilled worker is defined as a trained and qualified electrician or installer who has all of the following skills and experience:

- Knowledge of the functional principles and operation of on-grid systems.
- Knowledge of the dangers and risks associated with installing and using electrical devices and acceptable mitigation methods.
- Knowledge of the installation of electrical devices
- Knowledge of and adherence to this manual and all safety precautions and best practices.

2 Product Introduction

Soluna EOS-5K Pack is an LiFePO4 lithium battery product with BMS (battery management system). It is a battery module with CAN communication, under-voltage, over-voltage, over-current, over-temperature, under-temperature protection functions. It has the characteristics of high energy density, long life, safety and reliability and so on, and It is your trustworthy green environmental product.

2.1 Features

- Excellent safety performance.
- Long cycle life.
- Support for CAN-communication.
- Parallel interconnection of several systems.
- Number of expandable battery units.

2.2 Application

- Back-up power
- Micro-grid
- Home Energy Storage system

2.3 Outline Dimensions

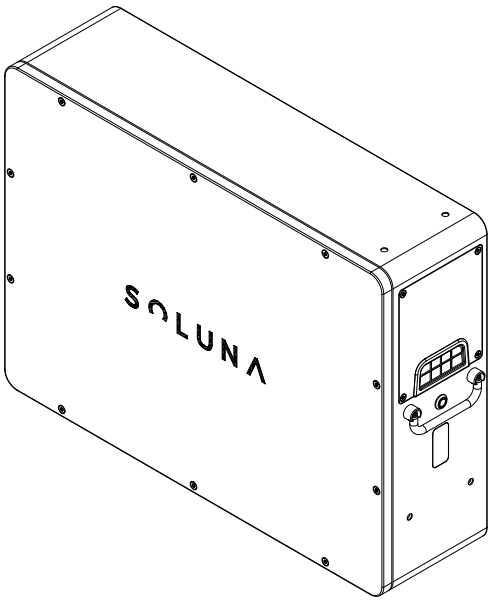

Width	165	mm
Depth	595	mm
Height	438	mm
Weight	51	kg

2.4 Technical data

Physical Characteristics

Width	165 mm
Depth	595 mm
Height	438 mm
Weight	51 kg

Electrical Characteristics

Battery type	LFP
Total Energy Capacity	5.12kWh
Usable Energy Capacity	4.60kWh
Battery Capacity (Nominal)	100Ah
Nominal Voltage	51.2V
Usable Voltage Range	48~57.6V
Charge Current (Recommended)	50A
Discharge Current (Recommended)	50A
Max. Continuous Charge Current	75A
Max. Continuous Discharge Current	100A
DOD	90%
Internal Resistor	⩽60mΩ
Cycle life @ 25℃ (under standard charge and discharge conditions，charge 0.2C,discharge 0.2C)	⩾6000
DC Disconnect	Contactor Fuse

Warranty

Please refer to SOLUNA WARRANTY CONDITIONS

BMS

Power consumption	<3W (work), <100mW (sleep)
Monitoring parameters	System Voltage System Current Cell Voltage Cell temperature
Communication	CAN
Protection	Over voltage Under Voltage Over current Over temperature Under temperature

System Configuration

Module parallel	1~12 Parallel

Operating Conditions

Installation Location	Indoor Outdoor
Operating Temperature	-10~50 ℃
Operating Temperature (Recommended)	15~30 ℃
Storage Temperature	-20~60 ℃
Humidity	5%~95%
Altitude	Max. 2,000 m
Cooling Strategy	Natural Convection

Reliability & Certification

Certificates	Cell：UL1642
	Battery Pack：CE、RoHS、IEC62619、UL1973
Transportation	UN38.3
Ingress Rating	IP54

2.5 Appearance

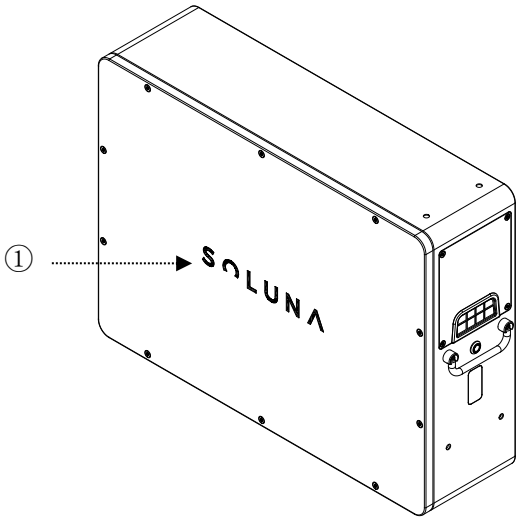

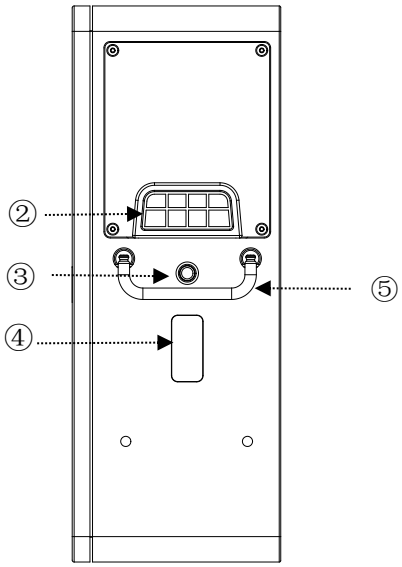

Number	Name	Remark
①	Logo	
②	Cable connection interface	
③	Power ON/OFF switch	
④	Battery capacity & Status indicator light	
⑤	Hand	

2.6 Connection port

User can see the connections port of Soluna EOS-5K Pack after the cover plat is opened, Please find the following pictures for details.

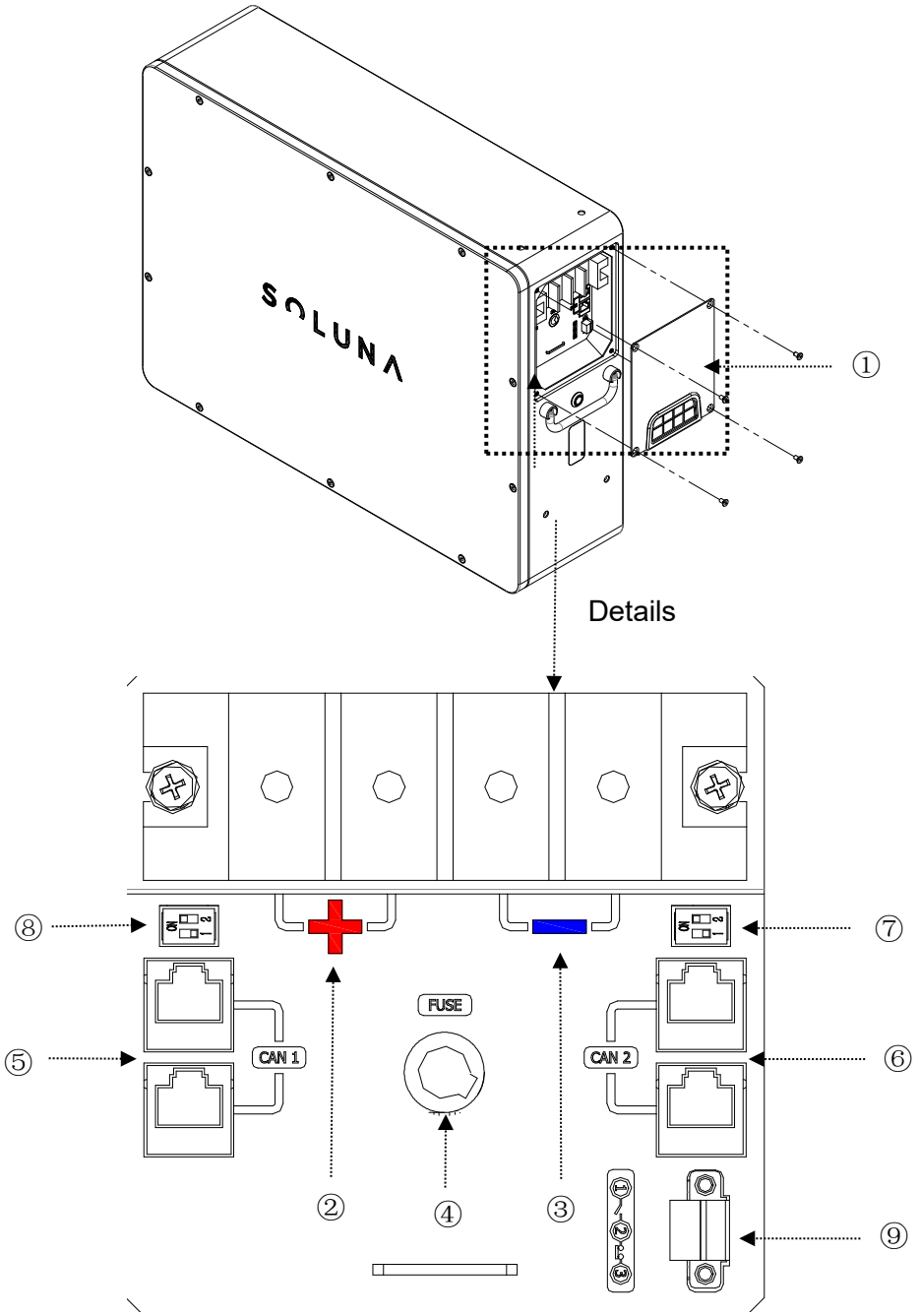

Number	Name	Remark
①	Cover plat	
②	Battery+	Positive pole of battery
③	Battery-	Negative pole of battery
④	FUSE	BMS fuse
⑤	CAN1 port	For BMS parameters monitoring

⑥	CAN2 port	For inverter communication
⑦	CAN1 dial switch	These DIP switches are used for the connection of multiple batteries
⑧	CAN2 dial switch	These DIP switches are used for the connection of multiple batteries
⑨	Remote port	Power switch of BMS power supply

2.7 CAN communication interface definition (CAN1&CAN2)

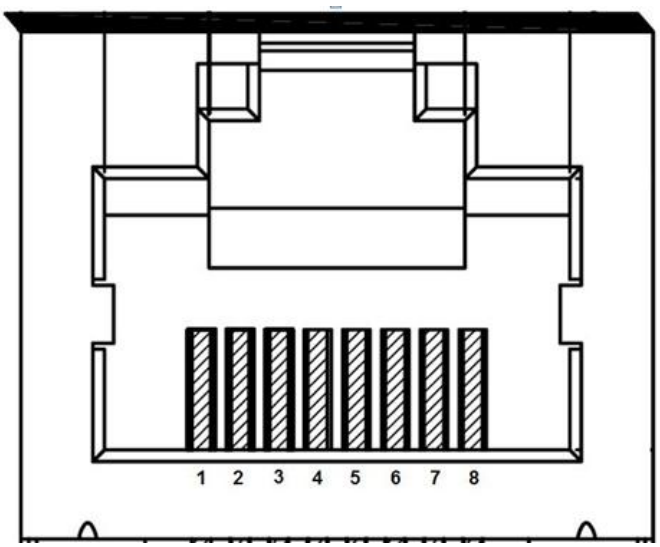

CAN1:

1	2	3	4	5	6	7	8
RS485A (WiFi)	RS485B (WiFi)	5V	CAN1H	CAN1L	GND	——	——

CAN2:

1	2	3	4	5	6	7	8
——	——	——	CAN1H	CAN1L	——	RS485A (reserve)	RS485B (reserve)

Remark

CAN1 is used for BMS parameters monitoring

CAN2 is used for inverter communication

2.8 LED lights definition

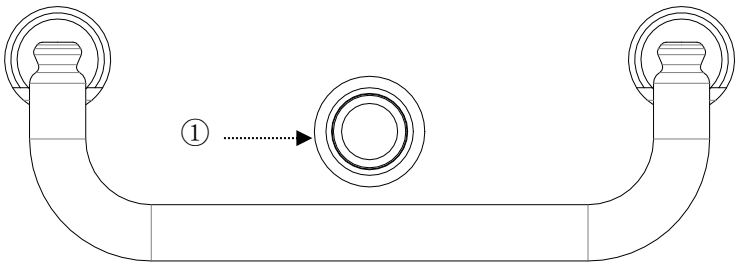

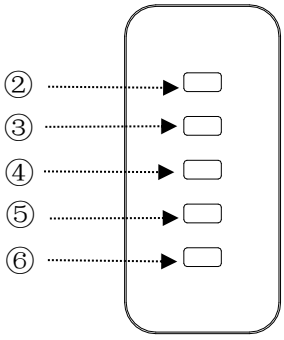

Number	Name	Remark
①	Power ON/OFF switch	White light
②	100% capacity light	Green light
③	75% capacity light	Green light
④	50% capacity light	Green light
⑤	25% capacity light	Green light
⑥	Status indicator light	Yellow light

Remark: Please see below information for Indicator running state.

a. Push button switch------The white light will be on after pressing the button.

b. Status indicator light------light is always on if there is no alarm, the light will blink if the Soluna EOS-5K Pack has any warning.

3 Installation

⚠	The battery pack is too heavy for one to carry. Make sure that two or more persons are moving the battery pack together.

3.1Unpacking the package

3.1.1 Cut the packing tape and open the carton，and remove the EPE foam.

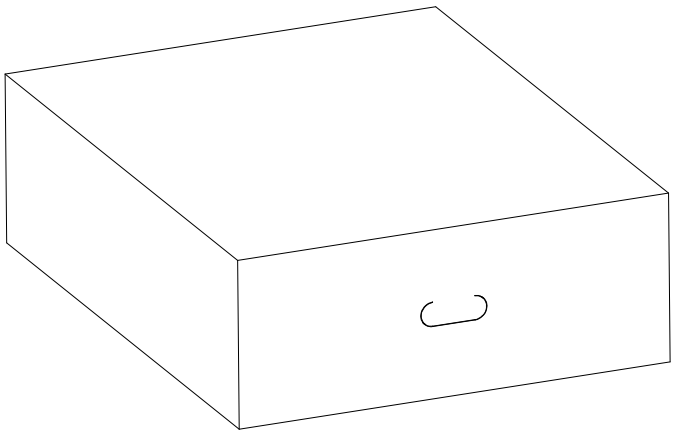

3.1.2 Pull out the battery pack, and remove the Scaleboard、PE bag、Carton、EPE Foam.

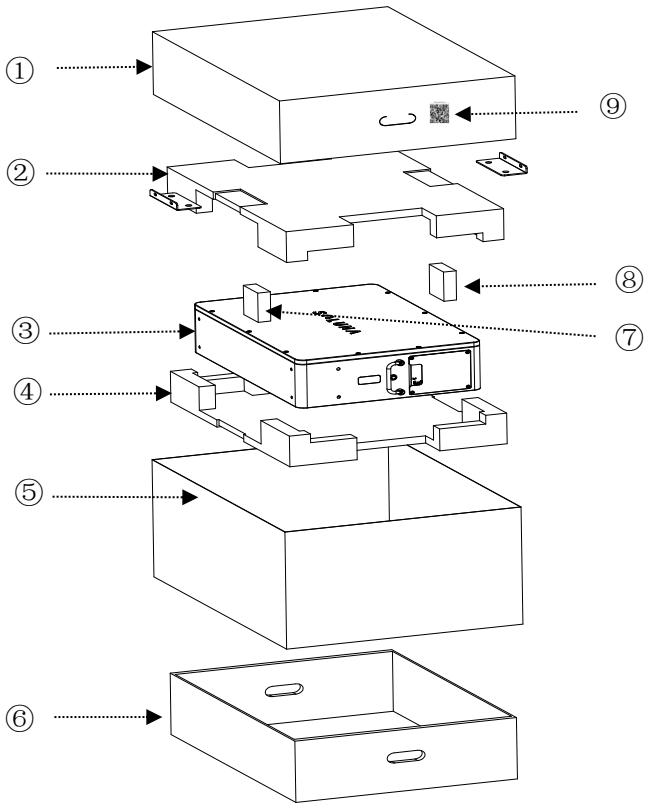

Number	Name	Remark
①	Upper cover of packing case	
②④	EPE foam	
③	Soluna EOS-5K Pack	
⑤	PE bag	
⑥	Lower cover of packing case	
⑦⑧	Accessories package	
⑨	QR code	Users can scan the QR code on the package to obtain the electronic user Manual.

3.2 Packing lists

The following table lists the numbers of each item included. If anything is damaged or missing, contact SOLUNA or your distributor.

Item	Name	Qty (pcs)	Remark
1	Soluna EOS-5K Pack	1	
2	U box accessory	2	
3	expansion bolt M8*100	4	
4	Screws-M6*10	6	
5	Screws-M4*8	2	
6	Screws-M6*16	4	
7	Wrench	1	
8	Communication cable(2m)	1	
9	Communication cable(0.5m)	2	

3.3 Installation materials

These installation materials shall be prepared by installers.

- Charging cables
- Network cable

3.4 Installation location

We recommend that Soluna EOS-5K Pack is used in Soluna Home energy storage systems, if not, please Make sure that the installation location meets the following conditions:

- The building is designed to withstand earthquakes.

- The location is far away from the sea, to avoid salt water and humidity.
- The floor is flat and level.
- There are no flammable or explosive materials nearby.
- The ambient temperature is between 15 and 30°C.
- The temperature and humidity stays at a constant level.
- There is minimal dust and dirt in the area.
- There are no corrosive gases present, including ammonia and acid vapor.

⚠	If the ambient temperature is outside the operating range, the battery pack stops operating to protect itself. The optimal temperature range for the battery pack to operate is 15°C to 30°C. Frequent exposure to harsh temperatures may deteriorate the performance and lifetime of the battery pack.

3.5 Installation tools

The following tools are required to install the battery pack:

Item	Photo	Name
1		Phillips-screwdriver bit
2	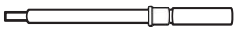	Hexagon wrench
3	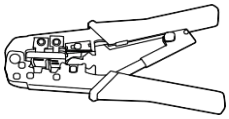	Network crimper
4	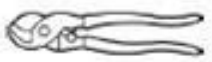	Wire cutters
5	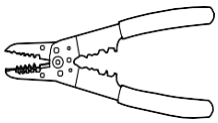	Wire stripper

6	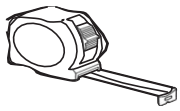	Tape measure

Remark:

Use properly insulated tools to prevent accidental electric shock or short circuits.

3.6 Safety gear

Wear the following safety gear when dealing with the battery pack. Installers must meet the relevant requirements of international standards, such as IEC 60364, or the domestic legislation.

Item	Photo	Name
1		Insulated gloves
2		Safety goggles
3		Safety shoes

3.7 Wiring specification

In order to standardize the wiring specification of Soluna EOS-5K Pack, the following requirements are required for connecting wires of Soluna EOS-5K Pack.

Battery wire	Communication cable	Remote wire
It is recommended to use 26 mm² (3AWG)of conductor with double insulation	It is recommended to use Standard communication cable with shielding function	It is recommended to use 0.5 mm^2 of Teflon wire

3.8 Installation method

The following three methods are recommended for Soluna EOS 5K Pack,

3.8.1 Wall hanging Mounting

Step 1) Open the expansion screw holes on the wall (the size of the opening hole is shown below)

Step 2) Mount the bracket to the wall with expansion screws.

Step 3) Fix the product on the wall bracket with 10 PCS M6 screws. (Diagram as shown below)

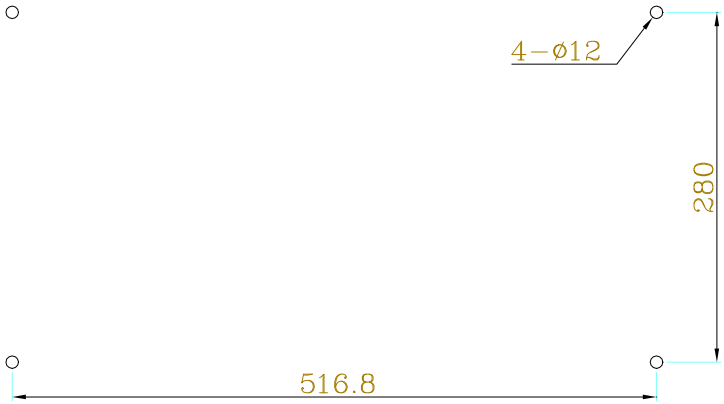

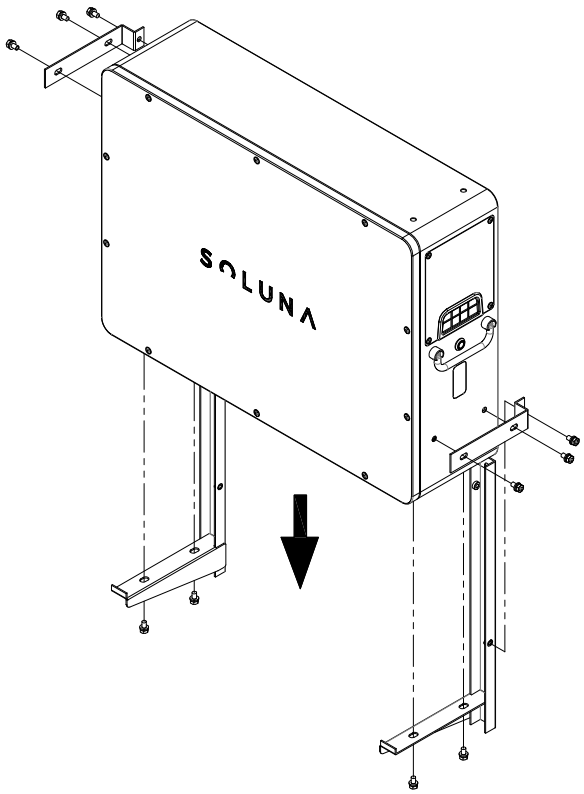

3.8.2 Floor mounting

Step 1) Fix the bracket on the product with 4 PCS M6 screws. (Diagram as shown below)

Step 2) To open expansion screw holes on the floor.

Step 3) Fix the product on the floor with another 4pcs M6 screws.

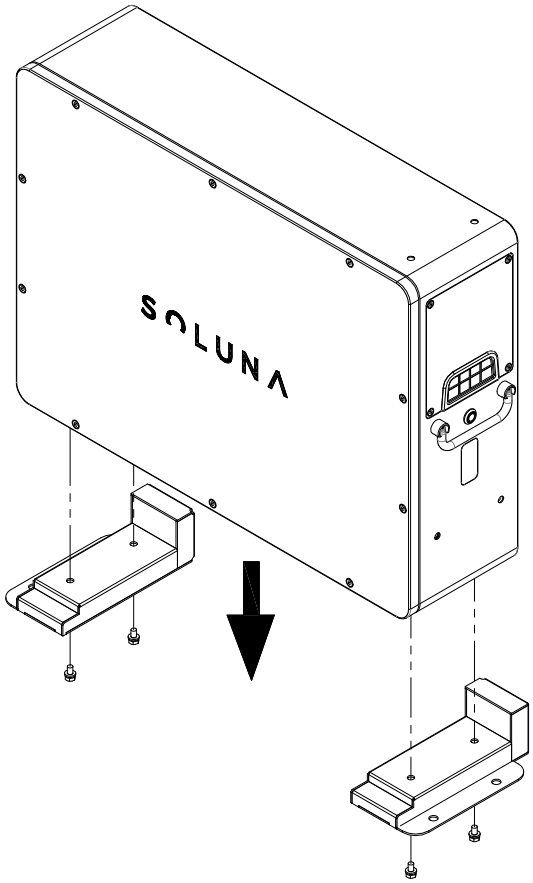

3.8.3 Cabinet Mounting

Step 1) Fix the U-box accessories to the product with 4pcs M6 countersunk head screws. (Diagram as shown below)

Step 2) Install the product inside of cabinet, make sure the mounting hole sizes are as below.

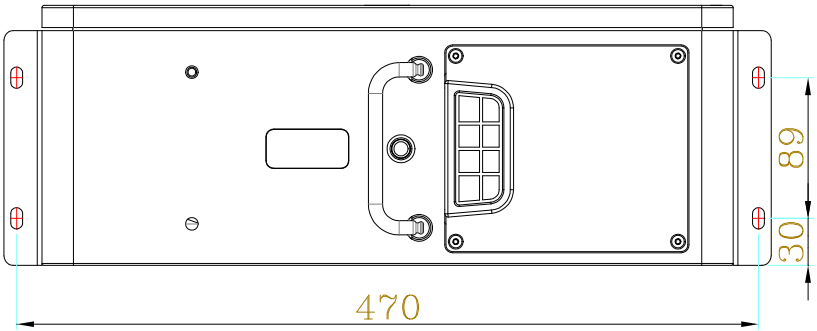

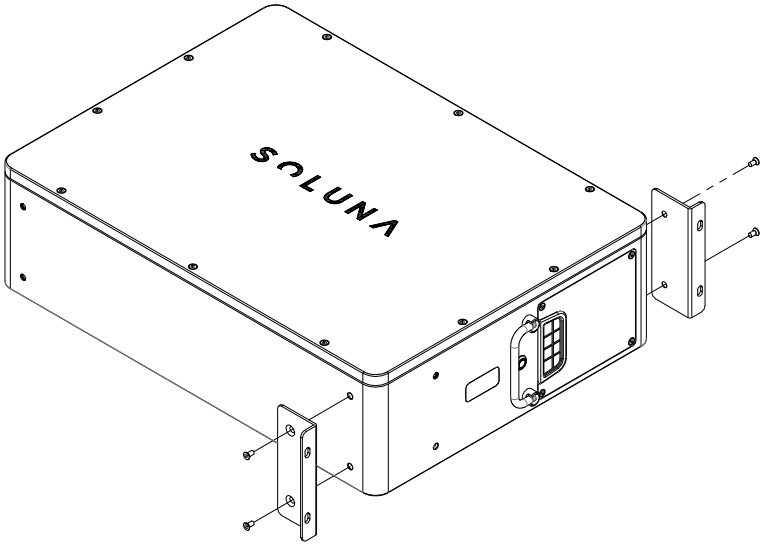

3.9 CAN communication connection

Please find the following drawing for details.

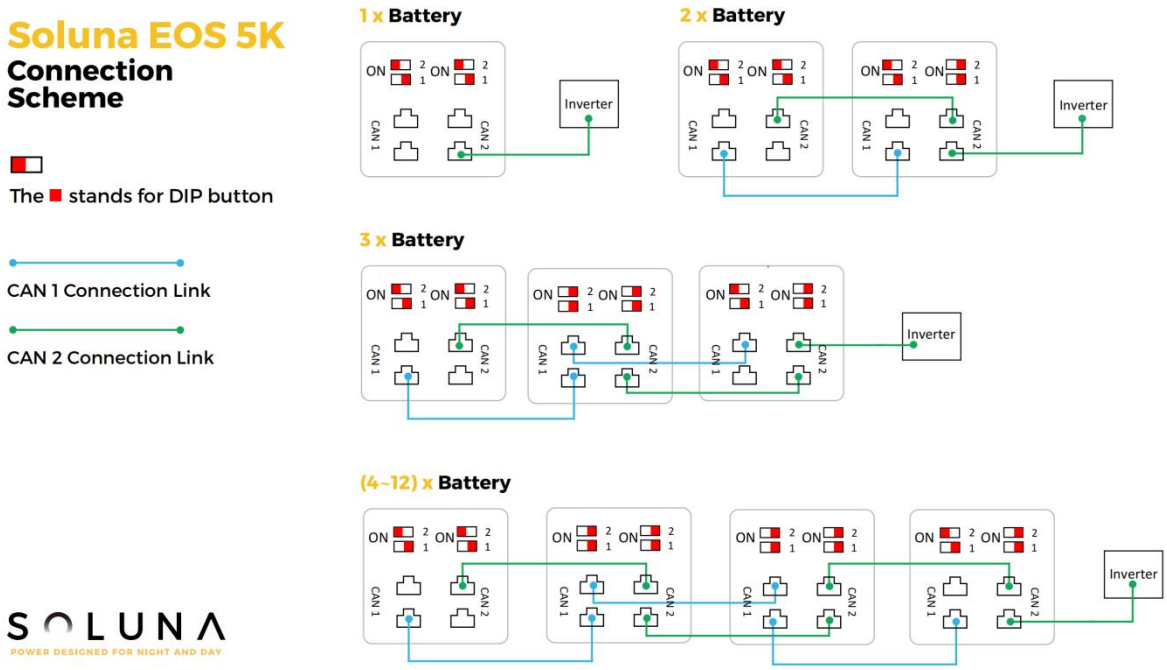

4 Electrical connection

There are 2 ways to connect the battery with the inverter. The details as follows.

4.1 Single unit is connected to the inverter, Please find the following diagram for details.

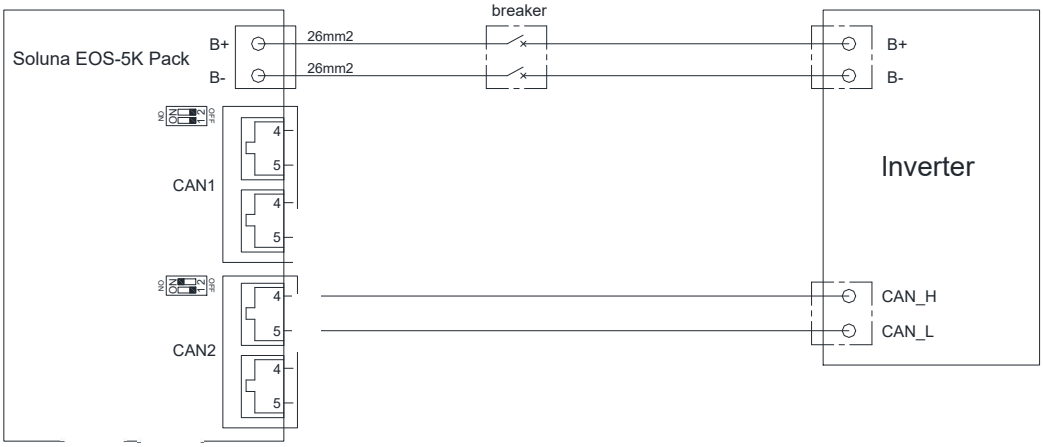

1）The “2” on the DIP switch of the first battery CAN2 port should be turned to the “ON” position.

4.2 Multiple units are connected to the inverter, Please find the following diagram for details.

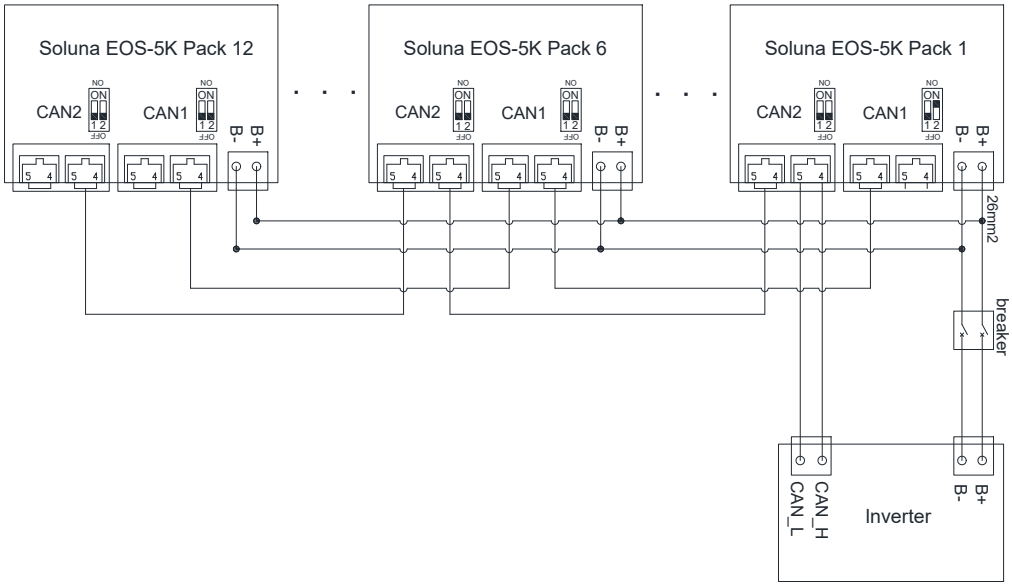

Remark;

1）The “2” on the DIP switch of the first battery CAN1 port should be turned to the “ON” position.

2）The “2” on the DIP switch of the last battery CAN1 & CAN2 port should be turned to the “ON” position.

5 How to operate Soluna EOS-5K Pack

There are two ways to start Soluna EOS-5K Pack, Please see below information for details.

5.1 Way 1 (Factory default)

Connect with pin2 & pin3 with metal connector first，then press the Metal button switch, the Soluna EOS-5K Pack will start to work within 25 seconds, it will stopped to output if there has no communications after 5 minutes

5.2 Way 2

Install a switch between PIN1 and PIN2 on the metal connector, when the switch on, the Soluna EOS-5K Pack will start to work within 25 seconds, it will stopped to output if there has no communications after 5 minutes

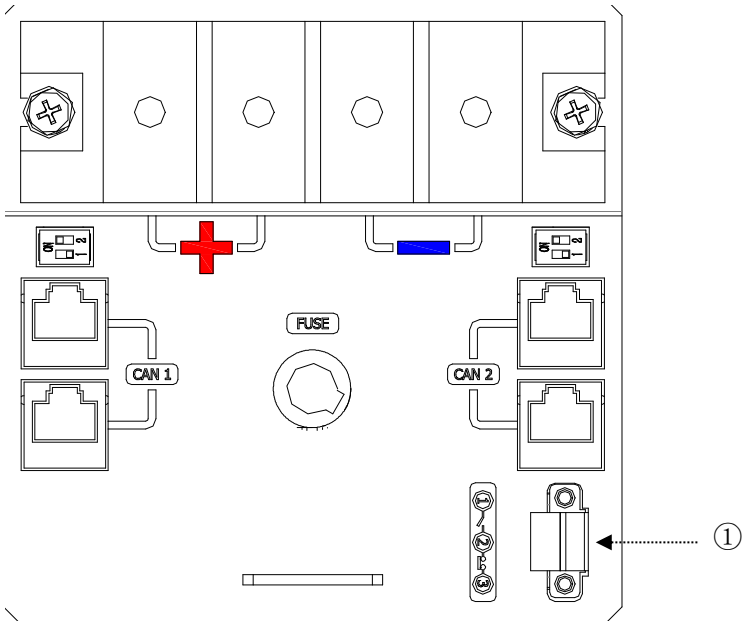

Number	Name	Remark
①	Metal connector	

6 Trouble shooting guideline

Please find the following table for details.

Issues	Led Indicator	Possible root cause	How to target the root cause	Solution
No communication between battery and inverter	Led is off	1) Compatible inverter firmware is not the latest reversion.	Please check the inverter APP or LCD/LED for firmware reversion.	Update inverter's firmware.
		2) Battery firmware is not matching with inverter manufacture.	Please use canbus tool box or Soluna smart energy cloud to check firmware reversion.	Update battery's firmware.
		3) Installor didn't choose Soluna battery correctly on inverter side.	Please check if the selection of battery is correct or not.	Reselect Soluna battery on inverter.
		4) Communication cable is loose or not correct.	Please check the communication cable status.	Replug or change the communication cable.
		5) Terminal resistor dial incorrectly.	Check the position of resistor dail.	Redial the terminal resistor.
		6) Inverter hardware fault.	Please change another inverter to try.	Contact with inverter manufacture.
		7) Battery hardware fault.	Please change another battery to try.	Contact with Soluna for further action.
Battery can't be charged or discharged	N/A	1) Inverter setting incorrect such as disable the charging or discharging, and time setting, etc.	Check the inverter setting.	reset the inverter setting.
		2) Inverter can't read Soluna battery type correctly.	Please check the battery type of product and product name shown in inverter side.	Contact with Inverter manufacture or Soluna for further action.
		3) Inverter hardware fault.	Please change another inverter to try.	Contact with Inverter manufacture.

		4) Battery hardware fault.	Please change another battery to try.	Contact with Soluna for further action.
Battery is empty overdischarged	Led is off	1) Off-grid installation-battery can't be charged for over 2 weeks due to no production of PV system(rainning season, snow season, or PV system fault).	Check the battery voltage through the reserved service port. If EOS 5k is less than 40V, please turn off the battery and contact with Soluna.	Contact with Soluna for further action.
		2）Customer didn't turn off the battery for over 2 weeks in the scenario such as: A. Installation is not finished. B. System failure, not running.	Check the battery voltage through the reserved service port. If EOS 5k is less than 40V, please turn off the battery and contact with Soluna。	Contact with Soluna for further action.
		3) The battery was stocked for over 2 years without charging.	Check the battery voltage through the reserved service port. If EOS 5k is less than 40V, please turn off the battery and contact with Soluna。	Contact with Soluna for further action.
Battery is not working correct in parallel installation	N/A	1) Battery communication cable is loose or not correct.	Check the communication cable status.	Replug or change the communication cable.
		2) Battery power cable is loose or not connected correctly.	Check the battery power cable.	Fasten the power cable .
		3) Battery communication port resistor missing or wrong dial	Check the resisitor dailling.	Plug the communication port resistor or redial.
		4) Battery firmware is not the latest.	Please use canbus tool box or Soluna smart energy cloud to check firmware reversion.	Update the firmware to the latest.

Battery wifi connecting failure	N/A	1) The Wifi network is not compatible	Check the ender user network type.	Please choose only 2.4G wifi mode.
		2) Connecting fail	APP will remind.	Please read the SOP of wifi setting up.
		3) System establish failed due to S/N valid.	APP will remind.	Contact with Soluna for further action.
Minor Alarm message on Soluna monitoring system		1) Battery reach to 1st level alarm such as battery over voltage	No need further action.	Please ignore it, this alarm message is only used for inverter strategy. The power of charging/discharging will be reduced.
		2) Battery reach to 2nd level alarm such as battery over voltage	No need further action.	Please ignore it, this alarm message is only used for inverter strategy. The power of charging/discharging will be limited.
Protection Alarm message on Soluna monitoring system	LED is blinking or yellow	3) Battery reach to 3rd level alarm such as battery over voltage	1）Please check the inverter LCD/LED or APP for the battery alarm information. 2） Please check the Soluna smart energy cloud for battery alarm information.	Battery will shut down, please contact with Soluna for further action

7 Contact us

We hope that this user manual has clearly demonstrated the product. If you still have any doubts or something not clear about it in the specifications, feel free contact to us please. we will do our best to support you!

Elno-Green
Tel: 0472/19 04 21
Email: info@elno-green.be
Web: www.elno-green.be